The information contained in this drawing is the confidential property of Platinum Energy Services Corp. No part thereof shall be reproduced or communicated to a third party without written authorization from Platinum Energy Services Corp.

FABRICATION NORTH

TIE-IN SCHEDULE			
MARK	SIZE / RATING	ELEVATION	DESCRIPTION
A	4" – 2500# RTJ	85 7/16" [2170]	GAS INLET
B	6" – 900# RTJ	11" [279]	GAS OUTLET
C	3" – 900# RTJ	16 3/4" [425]	WATER OUTLET
D	2" – 900# RTJ	6 7/16" [164]	LP DRAIN (FROM WATER OUTLET)
E	2" – 900# RTJ	6 7/16" [164]	LP DRAIN (FROM GAS OUTLET)
F	8" – 150# RFWN	107" [2718]	HP FLARE HEADER
G	2" – 150# RFWN	53" [1346]	FG INLET
H	2" – 150# RFWN	107" [2718]	HM SUPPLY
I	2" – 150# RFWN	107" [2718]	HM RETURN
J	2" – 150# RFWN	6 7/16" [164]	INSTR. AIR SUPPLY
K	2" – 900# RTJ	53" [1346]	PROVER TAP
L	2" – 900# RTJ	38" [965]	PROVER TAP

NOTE: ALL ELEVATION DIMENSIONS FROM TOP OF CHECKER PLATE.

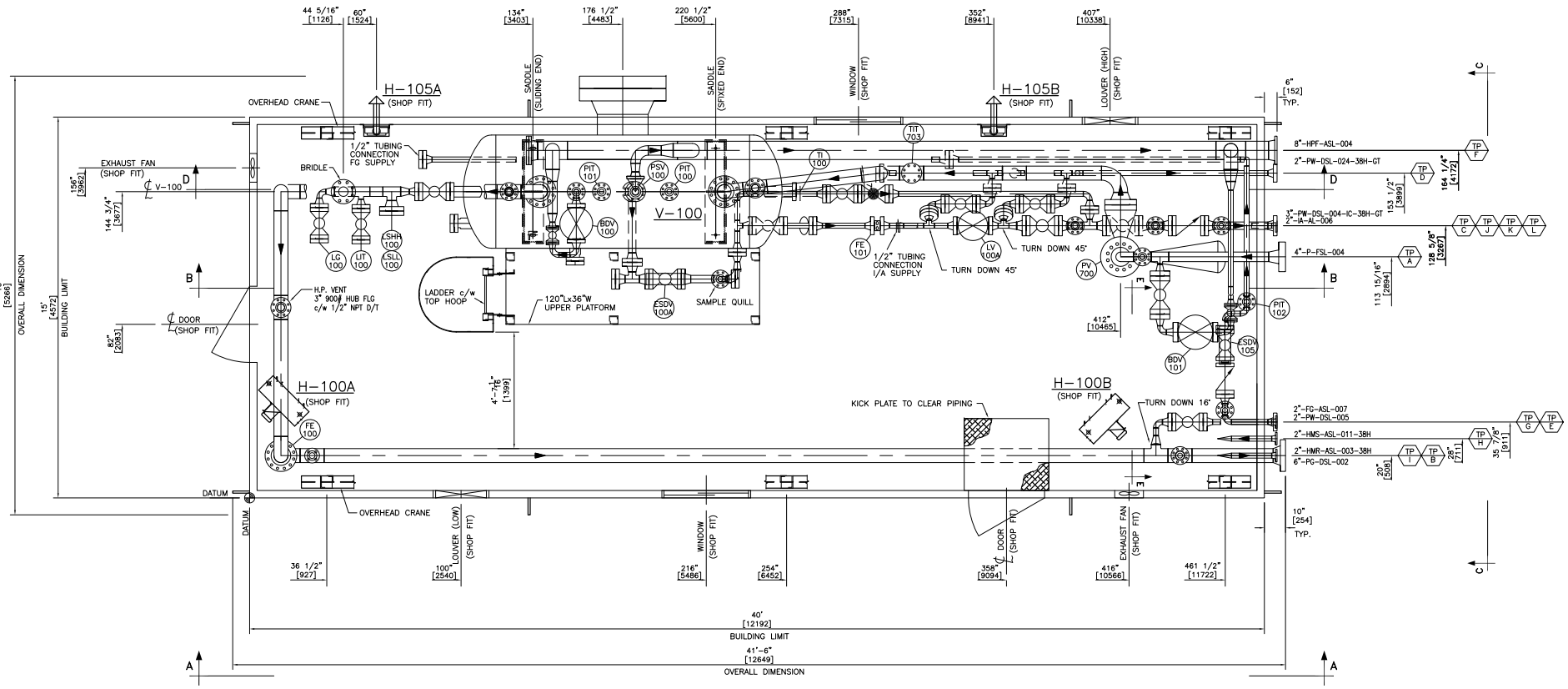

PLAN VIEW

NOTES:

1.) PIPING CODE TO ANSI B31.3 (CURRENT EDITION).
2.) DIMENSIONS ARE IN MILLIMETRES.
ELEVATION DATUM = T.O. CHK'D PL.
TAIL DIMENSIONS ARE FROM SKID PLAN DATUM.
DIMENSIONS TO CENTERLINES (UNO)
3.) SHIPPING DIMENSIONS TBA
4.) SHIPPING WEIGHT: V-100 = TBA
SKID = TBA
PIPING = TBA
TOTAL WEIGHT = – lbs (– kg)
5.) PIPE SUPPORTS SUBJECT TO CHANGE UPON ASSEMBLY
6.) PIPE SHOES SHALL NOT BE WELDED ONTO PIPE.

REFERENCE DRAWINGS		REV	DESCRIPTION	BY	DATE	CHK'D	APP'D
		E	REVISED AS PER NEW P&ID	BX	09/05/26	BX	RWS
		D	RE-ISSUED FOR APPROVAL	BX	09/05/13	BX	RWS
18371-SKD-01	STRUCTURAL STEEL – PLAN	C	ROTATED CHOKE VALVE PV-700	BX	09/05/08	BX	RWS
18371-GA-02	GENERAL ARRANGEMENT – ELEVATION	B	RE-ISSUED FOR APPROVAL	BX	09/05/06	BX	RWS
18371-PID-01	PIPING & INSTRUMENTATION DIAGRAM	A	ISSUED FOR APPROVAL	BX	09/04/29	BX	RWS

ENGINEER'S STAMP

DRAWN BY	BX	09/04/29
CHK'D BY	BX	09/04/29
APP'D BY	RWS	09/04/29
CAD REF 18371-GA-01.DWG	SCALE 1/2"=1'-0"	

PLATINUM Energy Services Corp.
CALGARY, ALBERTA

CLIENT
BG INTERNATIONAL
c/o RAPID RESPONSE

TITLE
02-21-55-22 W5M SUNDANCE FACILITY SEPARATOR PACKAGE
(V-100) GENERAL ARRANGEMENT – PLAN VIEW

JOB NO. 18371 | DRAWING NO. 18371-GA-01 | REV E

The information contained in this drawing is the confidential property of Platinum Energy Services Corp. No part thereof shall be reproduced or communicated to a third party without written authorization from Platinum Energy Services Corp.

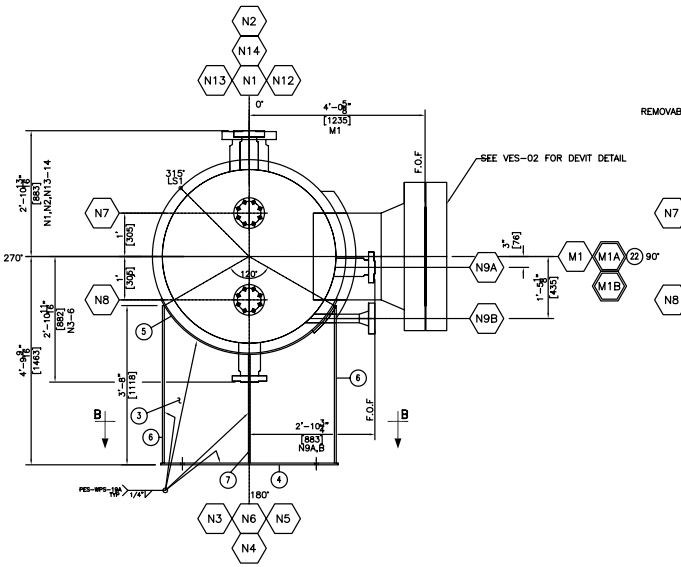

LEFT END VIEW

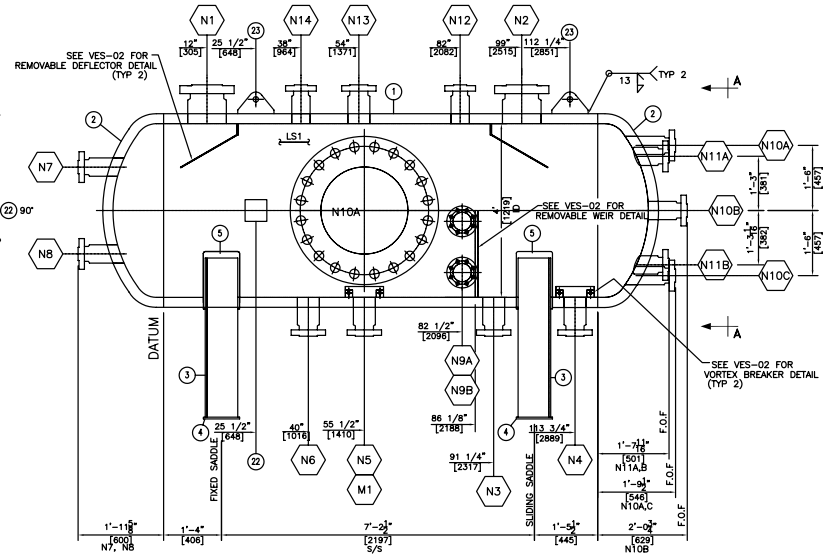

ELEVATION VIEW

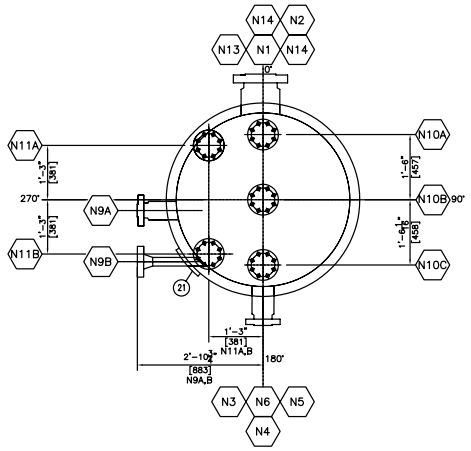

VIEW "A–A"

SADDLE & MANWAY M1 OMITTED FOR CLARIFY

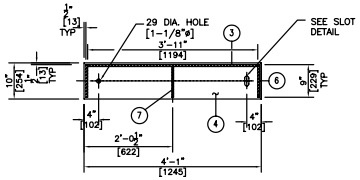

SECTION "B–B"

2 REQUIRED

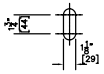

SLOT DETAIL

Scale: 3:1

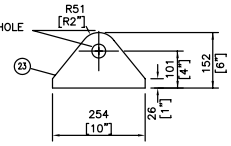

LIFT LUG DETAIL

SCALE NTS

(2 REQUIRED)

GENERAL NOTES:

1. VESSEL VOLUME = cuFT (cuM)
2. VESSEL WEIGHT EMPTY = lbs (kgs)
3. VESSEL WEIGHT FULL OF WATER = lbs (14,054 kgs)
4. APPROVED WELDING PROCEDURE 1863.2
5. REGISTERED QUALITY CONTROL PROGRAM AQP 1084(S).
6. WELD PROCEDURES : FOR PWHT VESSEL USE PES–WPS–19A / PES–WPS–02
7. RADIUS ALL OPENINGS 3mm [0.125"]
8. FOR NON PRESSURE RETAINING WELDS USE PES–WPS–19A (PWHT)
9. ALL WELD GAPS 3/32"MINIMUM.
10. ALL BOLT HOLES TO STRADDLE CENTRE LINES – UNLESS NOTED OTHERWISE
11. VESSEL SHOULD BE INTERNALLY COATED WITH DEVOE 253.
12. THE VESSEL SHOULD BE SP–6 SANDBLASTD, PRIMED AND PAINTED.
13. FABRICATION TOLERANCES SHALL BE AS PER PLATINUM "STANDARD FABRICATION TOLERANCES" UNLESS OTHERWISE NOTED
14. EXTERNAL LOADS ARE NOT APPLICABLE PER UG–22.
15. MTR TO BE PROVIDED FOR ALL PRESSURE RETAINING PARTS.
16. STRESS RELIEVE AT 1125°F FOR 2 HOURS AND 15 MIN.
17. DESIGN PRESSURE EQUALS TO MAWP.
18. PRODUCTION IMPACT TESTING

REQUIRED ON ITEMS #1 #2 PER UG–84 TO –49°F. MATERIAL & PRODUCTION IMPACT TESTING SHALL BE DONE FOR 3 SAMPLES AT AN AVERAGE OF 15ft.lbs ENERGY ONE SAMPLE NOT LESS THAN 10ft.lbs ENERGY. ALL OTHER B.O.M. ITEMS EXEMPT PER UG–20(f) 1–5 & UCS–66(b)

BILL OF MATERIAL

ITEM	REQ'D	DESCRIPTION		HEAT#
1	1	ROLLED PLATE 48"ID x 2.75"WT x 120"Lg	SA–516–70N	
2	2	HEAD 48"ID 2.75"NOM (2.625"MIN) 2:1SE 2"SF	SA–516–70N	
3	2	WEB PLATE, 3'–11" x 3'–7 1/2" x 1/2"THK (SEE DETAIL)	SA36	
4	2	BASE PLATE, 10" W x 4'–1" LG x 1/2" PLATE	SA36	
5	2	WEAR PAD 10" W x 61" x 3/8" THK ROLLED TO 53 1/2" ID c/w WEEP HOLE	SA516–70N	
6	4	OUTSIDE STIFF 1/2" PL., 9" W x 3'–7 1/2" LG	SA36	
7	2	MIDDLE STIFF 1/2" PL., 8 1/2" W x 30" LG	SA36	
8	2	FLANGE 6" 900# RTJHB 11 5/16" LG (CTS)	N1,N2 SA350 Gr.LF2 CL1	
9	5	FLANGE 3" 900# RTJHB 10 15/16" LG(CTS)	N3–N6,N13 SA350 Gr.LF2 CL1	
10	3	FLANGE 2" 900# RTJHB 10 7/8" LG(CTS)	N10B,N12,N14 SA350 Gr.LF2 CL1	
11	2	FLANGE 2" 900# RTJHB 14" LG (CTS)	N10A,C SA350 Gr.LF2 CL1	
12	2	FLANGE 2" 900# RTJHB OAL=14" LG (CTS)	N11A,B SA350 Gr.LF2 CL1	
13	2	FLANGE 2" 900# RTJHB 12 11/16" LG (CTS)	N7,N8 SA350 Gr.LF2 CL1	
14	1	FLANGE 2" 900# RTJHB 11 3/8" LG (CTS)	N9A SA350 Gr.LF2 CL1	
15	1	FLANGE 2" 900# RTJWN, SCH XXH	N9B SA350 Gr.LF2 CL1	
16	1	FLANGE 24" 900# RTJWN SCH 100	M1 SA350 Gr.LF2 CL1	
17	1	BLIND FLANGE 24" 900# RTJ	M1 SA350 Gr.LF2 CL1	
18	1	GASKET 24" 900# OVAL O–RING	M1 304SS	
19	20	STUDS 2 1/2" ø x 18" Lg c/w 2 NUTS EA	M1 SA–320–L7M/SA–194–2M	
20	1	2" PIPE, SCH XXH 1'–3 1/16" LG (CTS)	SA333 Gr.6	
21	1	REPAD, PLATE 1" THK x 6 1/2"OD x 2 3/8"ID	SA–516–70N	
22	1	NAME PLATE & BRACKET	SA–516–70N/SS	
23	2	LIFT LUGS, 3/4" PLATE (SEE DETAIL)	SA–516–70N	
24	1	24" PIPE, SCH 100 1'–6 3/4" LG (CTS)	M1 SA333 Gr.6	
25	1	REPAD, PLATE 2.75" THK x 36"OD x 24"ID	M1 SA–516–70N	

OPTIONAL BILL OF MATERIAL

30	1	FLANGE 24" 900# RTJHB 23 5/8" LG	M1A SA350 Gr.LF2 CL1	
31	1	ROLLED PLATE 24"OD x 2"WT x 18 3/4"Lg	M1B SA–516–70N	
32	1	REPAD, PLATE 2.5" THK x 32"OD x 24"ID	M1B SA–516–70N	
33	1	FLANGE 24" 900# RTJWN SCH 140	M1B SA350 Gr.LF2 CL1	

NOZZLE SCHEDULE

MARK	ø	QTY	RATING	TYPE	DESCRIPTION	ITEM No.	INT. PROJ.	EX. PROJ.	WELD
N1	6"	168	1	900#	RTJHB	INLET	8	0"	8"	6
N2	6"	168	1	900#	RTJHB	OUTLET	8	0"	8"	6
N3	3"	89	1	900#	RTJHB	MANUAL OIL OUT	9	0"	8"	6
N4	3"	89	1	900#	RTJHB	OIL OUT	9	0"	8"	6
N5	3"	89	1	900#	RTJHB	WATER OUT	9	0"	8"	6
N6	3"	89	1	900#	RTJHB	MANUAL WATER OUT	9	0"	8"	6
N7	2"	60	1	900#	RTJHB	PI	13	0"	AS SHOWN	6
N8	2"	60	1	900#	RTJHB	TI	13	0"	AS SHOWN	6
N9A	2"	60	1	900#	RTJHB	LG	14	0"	AS SHOWN	6
N9B	2"	60	1	900#	RTJWN	LG	15,20,21	0"	AS SHOWN	4,12
N10A,C	2"	60	1	900#	RTJHB	CONTROL BRIDLE	11	0"	AS SHOWN	6
N10B	2"	60	1	900#	RTJHB	CONTROL BRIDLE	10	0"	AS SHOWN	6
N11A,B	2"	60	1	900#	RTJHB	LIT	12	0"	AS SHOWN	6
N12	2"	60	1	900#	RTJHB	BLOWN DOWN	10	0"	8"	6
N13	3"	89	1	900#	RTJHB	PSV	9	0"	8"	6
N14	2"	60	1	900#	RTJHB	PIT	10	0"	8"	6
M1	24"	610	1	900#	RTJWN	MANWAY c/w DAVIT	16,17,18,19,24,25	3"	AS SHOWN	4,13

OPTIONAL NOZZLE SCHEDULE

MARK	ø	QTY	RATING	TYPE	DESCRIPTION	ITEM No.	INT. PROJ.	EX. PROJ.	WELD
M1A	24"	610	1	900#	RTJHB	MANWAY c/w DAVIT	30,17,18,19	3"	10"	7
M1B	24"	610	1	900#	RTJWN	MANWAY c/w DAVIT	17,18,19,31,32,33	3"	AS SHOWN	2,13

FILLET WELD SIZES (IN)

NOZZLE	A	B	C
N1–N8,N9A	.375"	–	–
N10–N14	.375"	–	–
N9B	.375"	–	.75"
M1	.375"	.375"	1.25"
M1A	.375"	.375"	–
M1B	.375"	.375"	1.0"

1 HEAD TO SHELL	2 LONG OR CIRC SEAM	3 SKIRT TO HEAD	4 NOZZLE BUTT WELD	5 THREADOLET	6 NOZZLE	7 NOZZLE I.P.	8 COUPLING	9 COUPLING RECESSED	10 SOCKET WELD	11 INLET DIVERTER	12 NOZZLE & REPAD	13 NOZZLE & REPAD I.P.
PES–WPS–16A	PES–WPS–16A	PES–WPS–19A	PES–WPS–04	PES–WPS–02	PES–WPS–02 PES–WPS–19A	PES–WPS–19A PES–WPS–02	PES–WPS–02	PES–WPS–02	PES–WPS–02	PES–WPS–04	PES–WPS–19A PES–WPS–02	PES–WPS–19A PES–WPS–02

REV	DESCRIPTION	BY	DATE	CHK'D	APP'D	CALC REV
A	ISSUED FOR ABSA APPROVAL	SW	09/05/01	BD	BD	0

DESIGN DATA

Design Press. 1800 Psig (12,410 kPag)	Serial No. TBA–01
Design Temp. 250°F (121°C)	C.R.N. No. TBA
Corrosion All. 0.125" (3mm)	Location STOCK
Test Press. 2340 Psig (16,133 kPag)	ASME Code: SECTION VIII, DIV.1 2008 ED.
X-Ray UW–11(a) RT1	Paint Spec. SEE NOTE 11 & 12
Stress Relief SEE NOTE 16	
Min. Metal Design Temp. –49°F @ 1800 Psig –45°C @ 12,410 kPag	Exempt From Impact Testing As Per ASME Code SEE NOTE 18

DESIGN / APP'D	BD	09/05/01
DRAWN BY	SW	09/05/01
CHK'D BY	BD	09/05/01
SCALE	3/4" = 1'–0"	

PLATINUM Energy Services Corp.

CLIENT: PLATINUM STOCK

TITLE: 48" ID x 10'–0" S/S 1800PSI 3 PHASE HORIZONTAL SEPARATOR

JOB NUMBER	DRAWING NUMBER	REV
STOCK	48ID–120–1800–H–S	A

The information contained in this drawing is the confidential property of Platinum Energy Services Corp. No part thereof shall be reproduced or communicated to a third party without written authorization from Platinum Energy Services Corp.

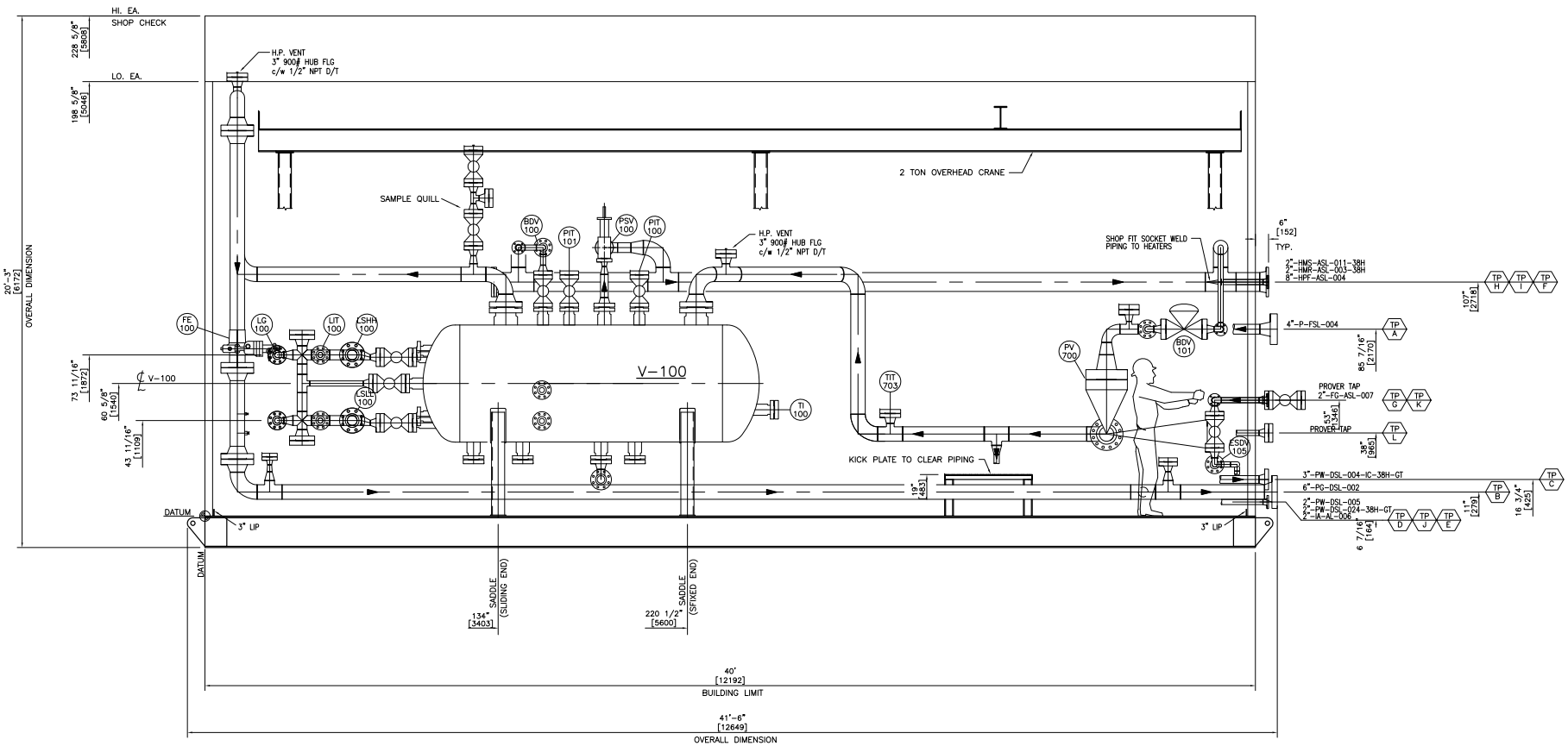

VIEW 'A-A'

NOTES:

REFERENCE DRAWINGS		REV	DESCRIPTION	BY	DATE	CHK'D	APP'D
		E	REVISED AS PER NEW P&ID	BX	09/05/26	BX	RWS
		D	RE-ISSUED FOR APPROVAL	BX	09/05/13	BX	RWS
18371-SKD-01	STRUCTURAL STEEL - PLAN	C	ROTATED CHOKE VALVE PV-700	BX	09/05/08	BX	RWS
18371-GA-01	GENERAL ARRANGEMENT - PLAN	B	RE-ISSUED FOR APPROVAL	BX	09/05/05	BX	RWS
18371-PID-01	PIPING & INSTRUMENTATION DIAGRAM	A	ISSUED FOR APPROVAL	BX	09/04/29	BX	RWS

ENGINEER'S STAMP

DRAWN BY	BX	09/04/29
CHK'D BY	BX	09/04/29
APP'D BY	RWS	09/04/29
CAD REF 18371-GA-02.DWG	SCALE 1/2"=1'-0"	

PLATINUM Energy Services Corp.
CALGARY, ALBERTA

CLIENT
BG INTERNATIONAL
c/o RAPID RESPONSE

TITLE
02-21-55-22 W5M SUNDANCE FACILITY SEPARATOR PACKAGE
(V-100) GENERAL ARRANGEMENT - SECTION VIEW 'A-A'

JOB NO.	DRAWING NO.	REV
18371	18371-GA-02	E

The information contained in this drawing is the confidential property of Platinum Energy Services Corp. No part thereof shall be reproduced or communicated to a third party without written authorization from Platinum Energy Services Corp.

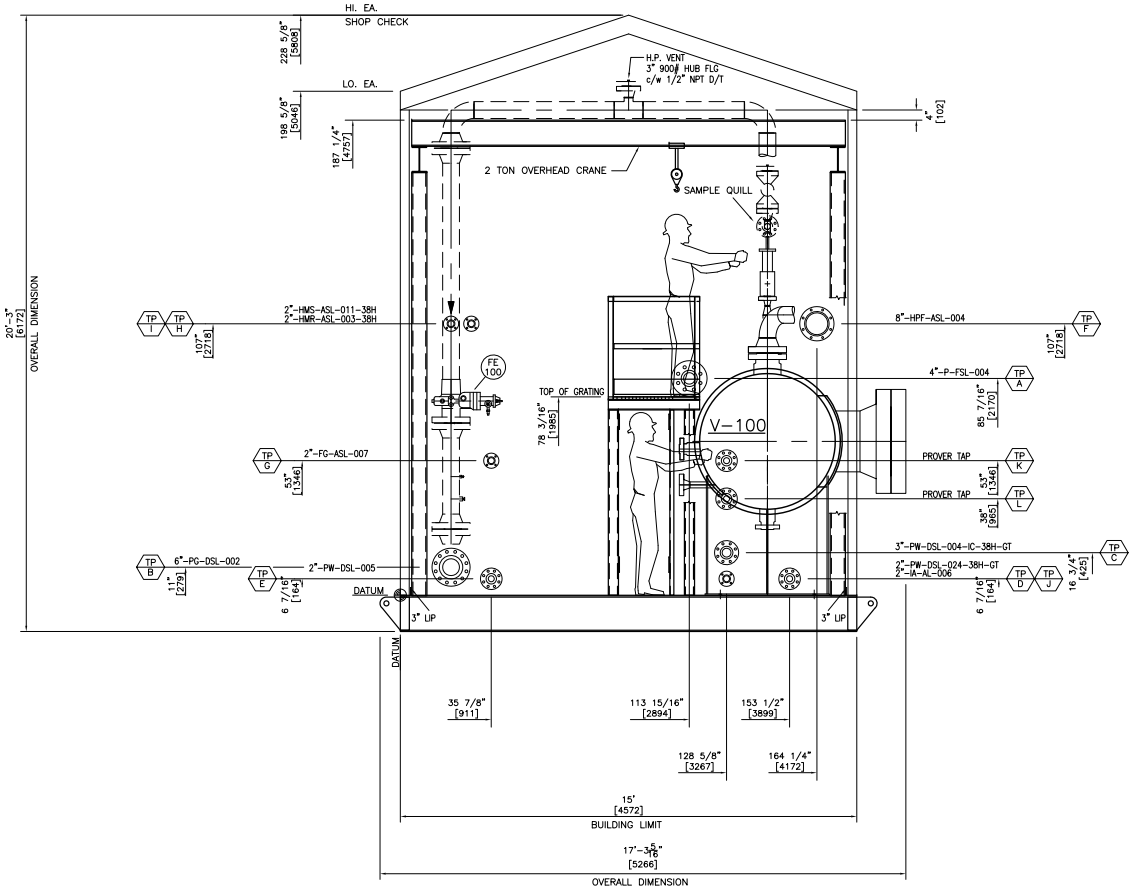

VIEW 'C-C'

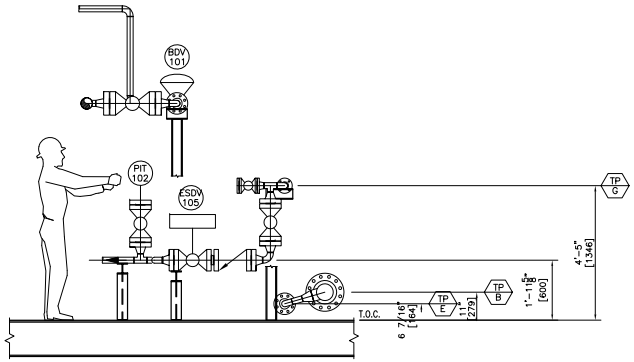

VIEW 'E-E'

NOTES:

REFERENCE DRAWINGS		REV	DESCRIPTION	BY	DATE	CHK'D	APP'D
		E	REVISED AS PER NEW P&ID	BX	09/05/26	BX	RWS
		D	RE-ISSUED FOR APPROVAL	BX	09/05/13	BX	RWS
18371-SKD-01	STRUCTURAL STEEL - PLAN	C	RELOCATED INLET CONNECTION TP-A	BX	09/05/08	BX	RWS
18371-GA-01	GENERAL ARRANGEMENT - PLAN	B	RE-ISSUED FOR APPROVAL	BX	09/05/06	BX	RWS
18371-PID-01	PIPING & INSTRUMENTATION DIAGRAM	A	ISSUED FOR APPROVAL	BX	09/04/29	BX	RWS

ENGINEER'S STAMP

DRAWN BY	BX	09/04/29
CHK'D BY	BX	09/04/29
APP'D BY	RWS	09/04/29
CAD REF 18371-GA-04.DWG	SCALE 1/2"=1'-0"	

PLATINUM Energy Services Corp.
CALGARY, ALBERTA

CLIENT
BG INTERNATIONAL
c/o RAPID RESPONSE

TITLE
02-21-55-22 W5M SUNDANCE FACILITY SEPARATOR PACKAGE
(V-100) GENERAL ARRANGEMENT - SECTION VIEW 'C-C'

JOB NO. 18371 | DRAWING NO. 18371-GA-04 | REV E

The information contained in this drawing is the confidential property of Platinum Energy Services Corp. No part thereof shall be reproduced or communicated to a third party without written authorization from Platinum Energy Services Corp.

WITH BOX ON ROOF FOR ACTUATOR

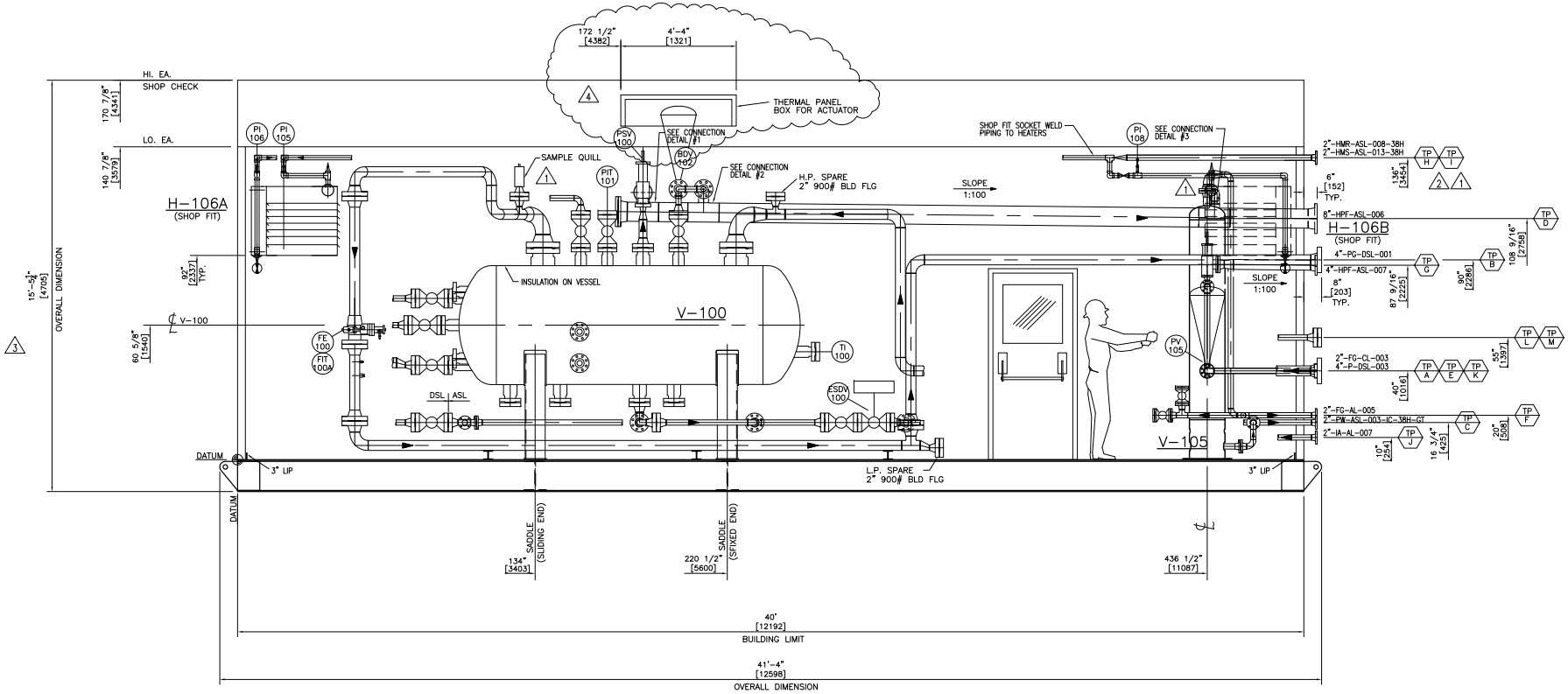

VIEW 'A-A'

NOTES:

REFERENCE DRAWINGS		REV	DESCRIPTION	BY	DATE	CHK'D	APP'D
		4	REVISED BUILDING HEIGHT	BX	09/09/14	BX	RWS
		3	REMOVED CRANE AND CHANGED BUILDING HEIGHT	BX	09/08/12	BX	RWS
		2	REVISED TP-H AND TP-I ELEVATION	BX	09/07/27	BX	RWS
		1	REVISED AS NOTED	LL	09/07/21	BX	RWS
		0	ISSUED FOR CONSTRUCTION	BX	09/07/14	BX	RWS
18371-SKD-01	STRUCTURAL STEEL - PLAN	G	REVISED AS PER NEW P&ID	BX	09/06/30	BX	RWS
18371-GA-01	GENERAL ARRANGEMENT - PLAN	F	REVISED AS PER NEW P&ID	BX	09/06/12	BX	RWS
18371-PID-01	PIPING & INSTRUMENTATION DIAGRAM	E	REVISED AS PER NEW P&ID	BX	09/05/26	BX	RWS

ENGINEER'S STAMP

DRAWN BY	BX	09/04/29
CHK'D BY	BX	09/04/29
APP'D BY	RWS	09/04/29
CAD REF 18371-GA-02.DWG	SCALE 1/2"=1'-0"	

PLATINUM Energy Services Corp.
CALGARY, ALBERTA

CLIENT
BG INTERNATIONAL
c/o RAPID RESPONSE

TITLE
d-A21-C/93-I-16 OJAY D FACILITY SEPARATOR PACKAGE
(V-100) GENERAL ARRANGEMENT - SECTION VIEW 'A-A'

JOB NO.	DRAWING NO.	REV
18371	18371-GA-02	4

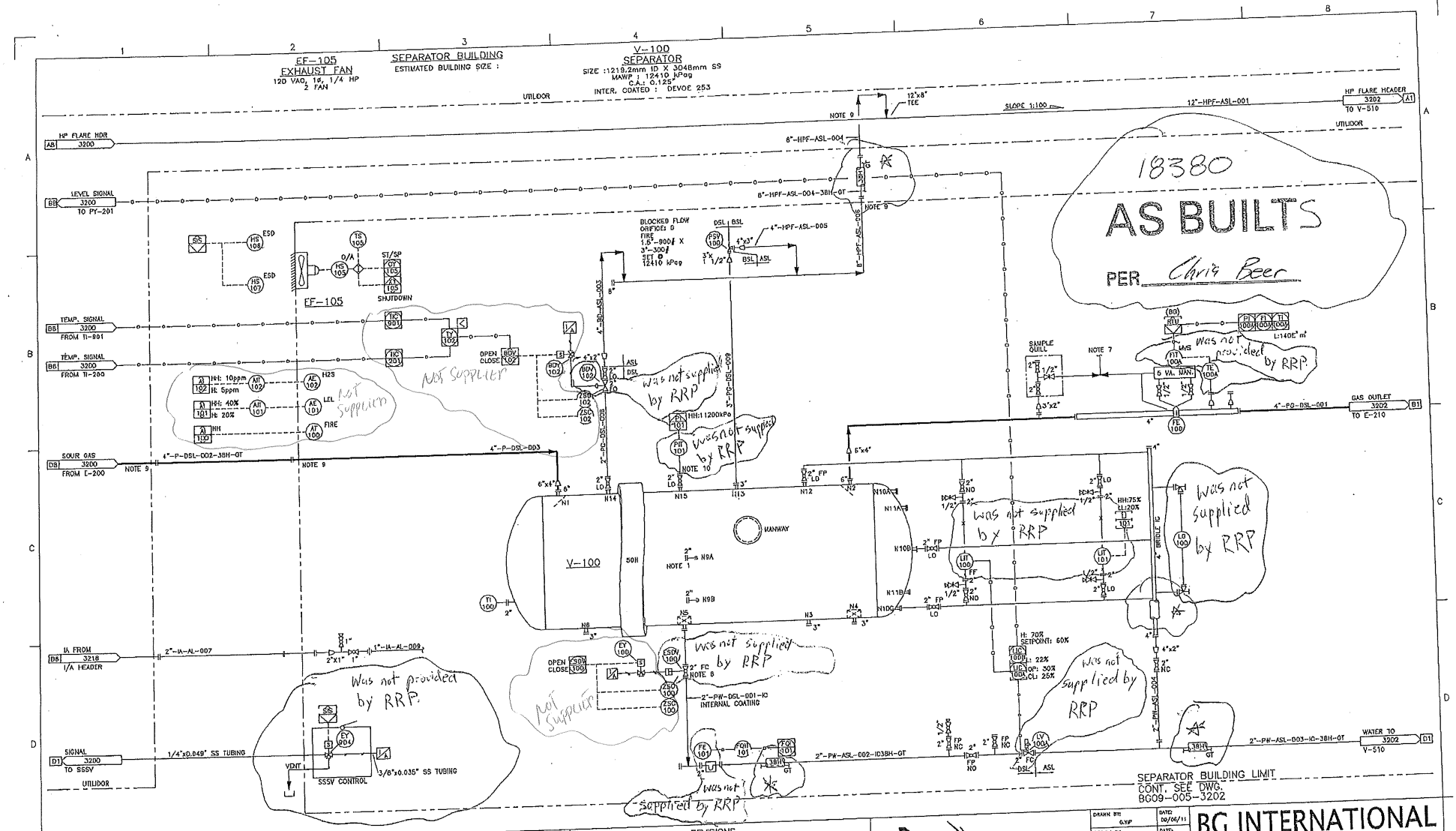

GENERAL NOTES

1. NOZZLE SHALL BE A MINIMUM OF 3" BELOW THE TOP OF THE WEIR PLATE.
2. ALL SPECIFICATION OF S.S. TUBING AND VALVES ARE AS PER PIPE CLASS.
3. BG OPERATIONS PROCEDURE SHALL BE FOLLOWED PRIOR TO OPERATING LC OR LO VALVES.
4. COLD RE-PRESSURIZATION NOT PERMITTED. OPERATIONS PROCEDURE TO BE FOLLOWED ON RE-PRESSURIZATION.
5. Y-STRAINER SHALL BE INSTALLED DOWNWARD, DO NOT POCKET.
7. VENT OUTSIDE IN SAFE AREA AT EAVE HEIGHT.
8. ACTUATORS PROVIDED WITH INTERNAL RELIEF.
9. HEAT TRACE SHALL EXTEND INSIDE BUILDING MIN 1 METER.
10. REFER TO PIT STANDARD INSTALLATION DRAWING.
11. TO USE ALL COMPRESSION (TUBING) VALVES INSTEAD OF THREADED VALVES.
12. ALL INSTRUMENT TO BE 300 ANSI FLANGE MINIMUM.

ENGINEER'S STAMP

PERMIT TO PRACTICE
Rapid Response Project ltd.
Signature
Date
PERMIT NUMBER: P-8697
The Association of Professional Engineers, Geologists and Geophysicists of Alberta

REVISIONS

NO.	DATE	DESCRIPTION	DSGN. BY	DRW. BY	CHKD. BY	PRJ. ENG.	APP'D BY
A	09 06 22	ISSUED FOR HAZOP (REVIEW)		AST	SW	TB	CS
B	03 06 23	ISSUED FOR HAZOP		OT	SW	TB	

RRP RAPID RESPONSE PROJECT Ltd.

DRAWN BY: OYP	DATE: 09/06/11	BG INTERNATIONAL
DESIGN BY:	DATE:	OJAY D SOUR GAS SATELLITE
CHECKED BY:	DATE:	LSD: d-A21-C/93-I-16
ENGINEER:	DATE:	P&ID – SEPARATOR
APPROVED:	DATE:	
SCALE: NONE	DRAWING NO. BG09-011-3201	REV. B

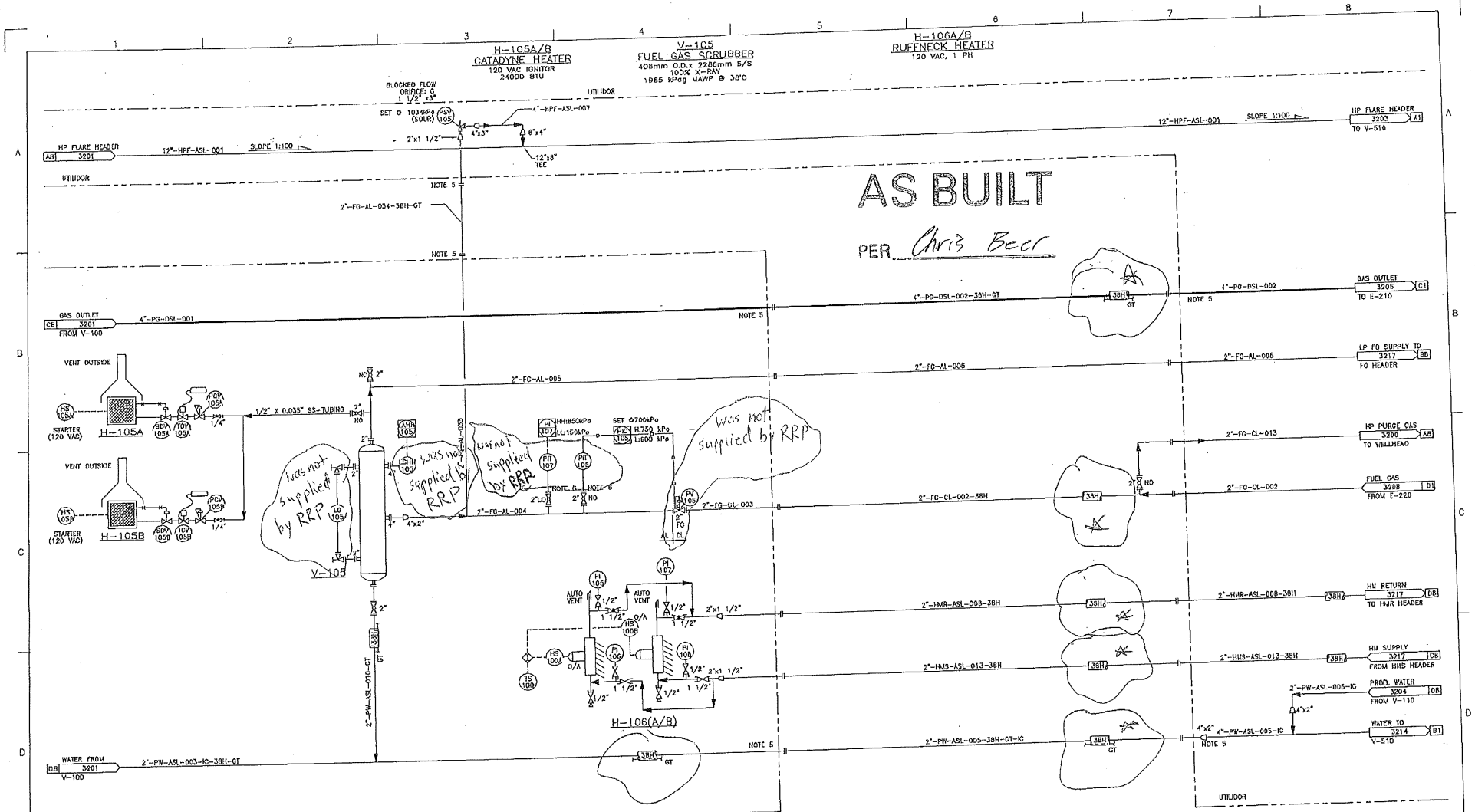

GENERAL NOTES

1. ALL SPECIFICATION OF S.S. TUBING AND VALVES ARE AS PER PIPE CLASS.
2. BG OPERATIONS PROCEDURE SHALL BE FOLLOWED PRIOR TO OPERATING LC OR LO VALVES.
3. STRAINERS SHALL BE INSTALLED FACING DOWN.
4. ~~CHECK VALVES SHALL BE DISSIMILAR PIPE OR BRAND.~~
5. HEAT TRACE SHALL EXTEND INSIDE BUILDING MIN 1 METER.
6. ~~REFER TO B1 STANDARD INSTALLATION DRAWING.~~
7. TO USE ALL COMPRESSION (TUBING) VALVES INSTEAD OF THREADED VALVES.
8. ALL INSTRUMENT TO BE 300 ANSI FLANGE MINIMUM.

ENGINEER'S STAMP

No longer in our scope

PERMIT TO PRACTICE
Rapid Response Project ltd.
Signature
Date
PERMIT NUMBER: P-8697
The Association of Professional Engineers, Geologists and Geophysicists of Alberta

REVISIONS

NO.	DATE	DESCRIPTION	DSGN. BY	DRW. BY	CHKD. BY	PRJ. ENG.	APP'D BY
A	09 06 22	ISSUED FOR HAZOP (ASMEM)		AEY	SW	TB	CS
B	09 08 23	ISSUED FOR HAZOP		GY	SW	TB	

RRP RAPID RESPONSE PROJECT Ltd.

DRAWN BY: O.YIP	DATE: 09/04/09	
DESIGN BY:	DATE:	
CHECKED BY:	DATE:	
ENGINEER:	DATE:	
APPROVED:	DATE:	
SCALE: NONE		

BG INTERNATIONAL

OJAY D SOUR GAS SATELLITE
LSD d-A21-C/93-I-16
P&ID – FUEL GAS SCRUBBER

DRAWING NO. BG09-011-3202 REV. B

RRP

PURCHASE ORDER / MATERIAL REQUISITION

200, 1134 - 8 Avenue S.W.
Calgary, Alberta, Canada T2P 1J5
Telephone: (403) 920-0095
Fax: (403) 920-0525

VENDOR		PURCHASE ORDER / MATERIAL REQUISITION	
Vendor	Platinum Energy Services Corp		
Contact	Bob Davies	Order. No	PO BG09-005-002
Telephone	403-264-6688	Date of Requisition	15-Apr-09
Facsimile	403-237-8271	Total Value	$607,950.00
Email	bob.davies@platinumenergy.net	GST	$30,397.50
Address	750 - 333, 11th Avenue S.W Calgary, Alberta T2R 1L9	Terms	Client terms and conditions shall apply
		AFE or Project #	02-21-55-22 W5M Sundance Facility

INVOICES	SHIPPING	
BG International Limited c/o Rapid Response Project Ltd. Suite 200, 1134 - 8th Avenue S.W. Calgary, Alberta, Canada T2P 1J5 Attention: Allan Ho	Ship Date	19-Jun-09
	Shipping Point	
	FOB Point	Platinum Shop
	Contact / Instructions	TBA

Item	Qty	Description		Unit Cost	Total
		Procurement of One (1) 48" ID x 10'-0" x 1958# (900# ANSI) Separator Package for 02-21-55-22 W5M Sundance Facility (BG09-005)			
		Reference: As per attached Platinum Quote #13547-BD Rev 1 & Email for addendum to 13547-BD Rev 1 Dated April 13, 2009			
1	1	ONE (1) 48" ID x 10'-0" x 1958# (900# ANSI) Separator Package Package Design Pressure 12,410 kPag		$607,950.00	$607,950.00
		Horizontal Inlet Separator: TAG: V-100			
		Size:	48" ID x 10'-0" s/s		
		Design:	Horizontal 3 phase (dressed 2 phase)		
		Design Pressure:	1,800 psig (12,410 kpa)		
		Design Temperature:	250° F (120° C)		
		M.D.M.T.	-49° F (-45° C)		
		Corrosion Allowance:	1/8" (3.2 mm)		
		Service:	RT-1, PWHT & All flanged nozzles		
		* All nozzles with the exception of the 24" manway have been quoted with zero internal projection.			
		* The 24" manway is impractical to install without any internal projection. This is required for nozzle reinforcement calculations.			
		* The 24" manway will be installed in shell as shown on P&ID and as per our discussion.			
		* HIC tested materials for heads and shells are not included in our proposal.			
		* PI 100, 105, TI 100, 105 and LG 105 are not shown on P&ID but can if requested be installed.			
		* Impregion coating is applied to all valves in the process except fuel gas system.			
		* Platforms as shown on supplied isometric drawings are included in our proposal.			
		* Vessel and water outlet piping is insulated with 1 ½" thick for personnel protection.			
		* Building eave has been increased for future crane installation if required.			
		The detailed list of valves and fittings supplied:			
		Connections:			
		N1	- 6" 900 RTJ 'HB' (Inlet)		
		N2	- 6" 900 RTJ 'HB' (Gas Outlet)		
		N3	- 3" 900 RTJ 'HB' (Manual Oil Outlet) c/w blind flange		
		N4	- 3" 900 RTJ 'HB' (Oil Outlet) c/w blind flange		
		N5	- 3" 900 RTJ 'HB' (Water Outlet)		
		N6	- 3" 900 RTJ 'HB' (Manual Water Outlet) c/w blind flange		
		N7	- 2" 900 RTJ 'HB' (PI) located on head		
		N8	- 2" 900 RTJ 'HB' (TI) located on head		
		N9a/b	- 2" 900 RTJ 'HB' (LG Water)		
		N10a/b/c	- 2" 900 RTJ 'HB' (Control Bridle)		
		N11a/b	- 2" 900 RTJ 'HB' (LIT connections)		
		N12	- 2" 900 RTJ 'HB' (Blowdown)		
		N13	- 3" 900 RTJ 'HB' (PSV)		
		N14	- 2" 900 RTJ 'HB' (PIT)		
		M1	- 24" 900 RTJ 'HB' (Manway) c/w Davit, blind & boltset (Install in Shell)		
		Internals:			
		2- Vortex breakers (removable) on N4 & N5			
		2- Inlet / Outlet deflectors (removable) on N1 & N2			
		1- Weir plate (adjustable)			

RRP

PURCHASE ORDER / MATERIAL REQUISITION

200, 1134 - 8 Avenue S.W.
Calgary, Alberta, Canada T2P 1J5
Telephone: (403) 920-0095
Fax: (403) 920-0525

VENDOR		PURCHASE ORDER / MATERIAL REQUISITION	
Vendor	Platinum Energy Services Corp		
Contact	Bob Davies	Order. No	PO BG09-005-002
Telephone	403-264-6688	Date of Requisition	15-Apr-09
Facsimile	403-237-8271	Total Value	$607,950.00
Email	bob.davies@platinumenergy.net	GST	$30,397.50
Address	750 - 333, 11th Avenue S.W Calgary, Alberta T2R 1L9	Terms	Client terms and conditions shall apply
		AFE or Project #	02-21-55-22 W5M Sundance Facility

INVOICES	SHIPPING	
BG International Limited c/o Rapid Response Project Ltd. Suite 200, 1134 - 8th Avenue S.W. Calgary, Alberta, Canada T2P 1J5 Attention: Allan Ho	Ship Date	19-Jun-09
	Shipping Point	
	FOB Point	Platinum Shop
	Contact / Instructions	TBA

Item	Qty	Description	Unit Cost	Total
		Procurement of One (1) 48" ID x 10'-0" x 1958# (900# ANSI) Separator Package for 02-21-55-22 W5M Sundance Facility (BG09-005)		
		***Reference**: As per attached Platinum Quote #13547-BD Rev 1 & Email for addendum to 13547-BD Rev 1 Dated April 13, 2009*		
		External:		
		2- Support saddles c/w wear plates		
		1- Manway davit		
		1- Name plate		
		1- 2" thick mineral wool c/w aluminum cover for personal protection		
		Inlet Process Piping:		
		4" 2500# RTJWN beginning 6" beyond skid edge		
		1- PV 700, 4" 2500# RTJ x 4" 900# Willis Choke c/w I2P transducer and regulator		
		1- PIT 700, Rosemount pressure indicating transmitter		
		3- 2" 900# RTJ regular port ball valve (PIT isolation valve) Grove		
		6- ½" MNPT x ½" FNPT needle valve, 316SS (PIT block & bleed valves) Century or equal		
		1- TIT 702, Rosemount temperature indicating transmitter c/w RTD assembly		
		1- PIT 701, Rosemount pressure indicating transmitter		
		1- PIT 702, Rosemount pressure indicating transmitter		
		1- 2" 900# RTJ ball valve, normally closed (manual drain valve) Grove		
		1- 6" 900# RTJ spectacle blind on vessel nozzle N1 (inlet connection)		
		Items supply by Client and Installed by Platinum:		
		PV 700, PIT 700, TIT 702, PIT 701, PIT 702		
		Vessel (V-100) Accessories:		
		1- PIT 100, Rosemount pressure indicating transmitter		
		1- 2" 900# RTJ regular port ball valve (PIT isolation valve) Grove		
		2- ½" MNPT x ½" FNPT needle valve, 316SS (PIT block & bleed valves) Century or equal		
		3- ½" FNPT x ½" FNPT needle valve, 316SS (PIT block & bleed valves) Century or equal		
		1- ½" FNPT x ½" FNPT check valve, 316SS (PIT block & bleed valves) Century or equal		
		1- 2" 900# RTJ spectacle blind on vessel nozzle N14 (PIT connection)		
		1- PSV 100, 1 ½" 900 RTJ x 3" 150# RF Farris pressure relief valve, size G orifice, set at 1958 psig, size to be confirmed		
		1- 3" 900# RTJ spectacle blind on vessel nozzle N12 (PSV connection)		
		1- PI 100, Western or equal pressure gauge, 4 ½" dial, 0-2000 psig range, dual scale, ½" NPT end connection, liquid filled, 316SS Body & Internals. Mounted on D&T hub blind flange.		
		1- ½" MNPT x ½" FNPT needle valve, 316SS (PI isolation) Century or equal		
		1- TI 100, Western or equal temperature gauge, -50 to 300°F, dual scale, 3" dial x 8"stem, ½" FNPT x ¾" MNPT c/w 316 SS thermowell		
		Items supply by Client and Installed by Platinum:		
		PIT 100, PSV 100, PI 100, TI 100		
		Vessel (V-100) Blowdown Process:		
		1- 2" 900# RTJ spectacle blind on vessel nozzle N11 (BDV connection)		
		2- 2" 900# RTJ regular port ball valves (BDV isolation valves, normally open) Grove		
		1- BDV 100, 2" 900 RTJ Fisher control valve, fail open c/w Limit switches, Asco solenoid and regulator		
		2" 900# RTJ piping terminating into 6" NPS flare header		
		Items supply by Client and Installed by Platinum:		
		BDV 100		

RRP

PURCHASE ORDER / MATERIAL REQUISITION

200, 1134 - 8 Avenue S.W.
Calgary, Alberta, Canada T2P 1J5
Telephone: (403) 920-0095
Fax: (403) 920-0525

VENDOR		PURCHASE ORDER / MATERIAL REQUISITION	
Vendor	Platinum Energy Services Corp		
Contact	Bob Davies	Order. No	PO BG09-005-002
Telephone	403-264-6688	Date of Requisition	15-Apr-09
Facsimile	403-237-8271	Total Value	$607,950.00
Email	bob.davies@platinumenergy.net	GST	$30,397.50
Address	750 - 333, 11th Avenue S.W Calgary, Alberta T2R 1L9	Terms	Client terms and conditions shall apply
		AFE or Project #	02-21-55-22 W5M Sundance Facility

INVOICES	SHIPPING	
BG International Limited c/o Rapid Response Project Ltd. Suite 200, 1134 - 8th Avenue S.W. Calgary, Alberta, Canada T2P 1J5 Attention: Allan Ho	Ship Date	19-Jun-09
	Shipping Point	
	FOB Point	Platinum Shop
	Contact / Instructions	TBA

Item	Qty	Description	Unit Cost	Total
		Procurement of One (1) 48" ID x 10'-0" x 1958# (900# ANSI) Separator Package for 02-21-55-22 W5M Sundance Facility (BG09-005)		
		Reference: As per attached Platinum Quote #13547-BD Rev 1 & Email for addendum to 13547-BD Rev 1 Dated April 13, 2009		
		Vessel (V-100) Control Bridle & Accessories:		
		1- 4 ½" OD x 60" long bridle to include:		
		1- ½" NPT regular port ball valve (bridle drain), Nutron 3000#		
		1- ½" MNPT x ½" FNPT needle valve, 316SS (PIT block & bleed valves) Century or equal		
		3- 2" 900# RTJ spectacle blinds on vessel nozzles N10a/b/c (brindle connection)		
		3- 2" 900# RTJ full port ball valves (bridle isolation valves) Grove		
		2- LSHH 100/101, SOR or equal electric high level switch, 2" NPT mounted on D&T hub blind flange		
		2- LSLL 100/101, SOR or equal electric low level switch, 2" NPT mounted on D&T hub blind flange		
		1- LG 100, Quest-Tec or equal (36" visible) Transparent level gauge c/w 1S gauge cocks		
		2- 2" 900# RTJ regular port ball valves (LG isolation valves) Grove		
		1- ½" NPT regular port ball valve (LG drain), Nutron 3000#		
		1- ½" MNPT x ½" FNPT needle valve, 316SS (LG clean out valves) Century or equal		
		1- PIT 101, Rosemount pressure indicating transmitter		
		1- 2" 900# RTJ regular port ball valve (PIT isolation valve) Grove		
		4- ½" MNPT x ½" FNPT needle valve, 316SS (PIT bleed & purge valves) Century or equal		
		1- LIT 100, Rosemount 3051L or equal level indicating transmitter, 2" 900# RTJ low connection and ½" NPT capillary connection mounted on D&T hub blind flange		
		3- ½" MNPT x ½" FNPT needle valve, 316SS (LIT bleed & purge valves) Century or equal		
		3- ¾" NPT regular port ball valve (bridle drain), Nutron 3000#		
		1- ¾" NPT class 1500# swing check valve (bridle drains), Wheatley		
		Items supply by Client and Installed by Platinum:		
		LSHH 100/101, LSLL 100/101, LG 100, PIT 101, LIT 100		
		Vessel (V-100) Liquid Outlet Process:		
		1- 3" 900# RTJ spectacle blind on vessel nozzle N5 (oil outlet)		
		1- 3" 900# RTJ regular port ball valve (ESDV isolation valve) Grove		
		1- ESDV 100A, 3" 900 RTJ actuated ball valve, fail closed c/w Asco solenoid and regulator		
		2- 2" 900# RTJ regular port ball valves (Sample quill connection) Grove		
		1- FE/FQIT 101, 2" 900 RTJ safer style EZ-IN liquid turbine meter c/w pulse output totalizer		
		1- LV 100A, 2" 900 RTJ Fisher control valve, fail open c/w I2P transducer and regulator		
		1- 2" 900# RTJ regular port ball valve (LV block valve) Grove		
		1- 2" 900# RTJ Y-Strainer c/w 2" 900# RTJ regular port ball valve drain		
		2- 2" 900# RTJ regular port ball valves (LV manual drain valves) Grove		
		1- 2" 900# RTJ globe valve (LV & FE by-pass valve) Navco or equal		
		2- 3" 900# RTJ regular port ball valves (block valves) Grove		
		1- 3" 900# RTJ regular port ball valve (sample point) Grove		
		1- 3" 900# RTJ swing check valve (liquid out) Wheatley		
		3" 900# RTWN terminating 6" beyond skid edge		
		Items supply by Client and Installed by Platinum:		
		ESDV 100A, FE / FQIT 101, LV 100A		

RRP

PURCHASE ORDER / MATERIAL REQUISITION

200, 1134 - 8 Avenue S.W.
Calgary, Alberta, Canada T2P 1J5
Telephone: (403) 920-0095
Fax: (403) 920-0525

VENDOR		PURCHASE ORDER / MATERIAL REQUISITION	
Vendor	Platinum Energy Services Corp		
Contact	Bob Davies	Order. No	PO BG09-005-002
Telephone	403-264-6688	Date of Requisition	15-Apr-09
Facsimile	403-237-8271	Total Value	$607,950.00
Email	bob.davies@platinumenergy.net	GST	$30,397.50
Address	750 - 333, 11th Avenue S.W Calgary, Alberta T2R 1L9	Terms	Client terms and conditions shall apply
		AFE or Project #	02-21-55-22 W5M Sundance Facility

INVOICES	SHIPPING	
BG International Limited c/o Rapid Response Project Ltd. Suite 200, 1134 - 8th Avenue S.W. Calgary, Alberta, Canada T2P 1J5 Attention: Allan Ho	Ship Date	19-Jun-09
	Shipping Point	
	FOB Point	Platinum Shop
	Contact / Instructions	TBA

Item	Qty	Description	Unit Cost	Total
		Procurement of One (1) 48" ID x 10'-0" x 1958# (900# ANSI) Separator Package for 02-21-55-22 W5M Sundance Facility (BG09-005)		
		***Reference**: As per attached Platinum Quote #13547-BD Rev 1 & Email for addendum to 13547-BD Rev 1 Dated April 13, 2009*		
		Vessel (V-100) Sales Gas Metering & Valving:		
		1- 6" 900# RTJ spectacle blind on vessel nozzle N2 (gas outlet)		
		1- FE 100, 6" 900# RTJ Dual Chamber (Senior) meter run, Sch 160, AGA 2000 configuration c/w One (1) 2" 900# RTJ upstream, Two (2) 2" 900# RTJ downstream connections, flanged outer ends.		
		2- 2" 900# RTJ regular port ball valves (FE by-pass valves) Grove		
		2 - FIT 100A/B, Rosemount 3095 or equal multi-variable indicating transmitters c/w 316SS integral manifolds		
		2- TE100A/B, Rosemount or RTD assembly		
		4- ½" NPT regular port ball valves (FIT block valves) , Nutron 3000#		
		2- 2" 900# RTJ regular port ball valves (sample quill) Grove		
		1- ¼" MNPT x ½" FNPT needle valve, 316SS (sample quill bleed valves) Century or equal		
		1- 6" 900# RTJ regular port ball valve (gas out) Grove		
		6" 900 RTHWM terminating 6" beyond skid edge		
		Testing / Inspection		
		Hydrotesting		
		Pressure Vessel — Will be Hydrotested to 1.3 Times Maximum Allowable Working Pressure as per ASME Section VIII		
		Radiography		
		Vessels — Full (RT-1)		
		Piping (welded piping only) — 100% X-ray		
		PWHT		
		Vessels — Yes		
		Piping (welded piping only) — Yes		
		Ultrasonic Testing — Yes		
		Hardness Testing — Yes		
		Painting and Coating Specifications:		
		External Surface Preparation — SSPC-SP#6 (Sandblast Cleaned)		
		Vessel External Finish Paint — One (1) Coat of Warm Gray DTM		
		Skid & Piping External Finish Paint — One (1) Coat of Warm Gray DTM		
		Internal Surface Preparation — SP-6		
		Internal Coating — Devoe 253		
		Data Manuals:		
		One (1) set of Data manual will be issued with each new unit.		
		Note: *Cost to include a 2-ton overhead crane c/w crane way *All Drawings P. Eng (BC) Stamped		

SPECIAL NOTES:

MATERIAL SPECIFICATIONS

The client requires that all materials have accompanying **MTR's, CRN & Alberta Design Registration numbers** when the material is shipped to the contractor. All aboveground sour, low temperature material included in this Purchase Order must meet NACE MR-0175 latest edition for sour low temperature (-45° C) Class 1 service. The hardness for all pipes, valves, flanges and fittings shall not exceed 200 Brinnel.

INVOICE PROCESSING/PAYMENT INFORMATION:

All invoices must be directed to BG International Limited c/o RRP, with the address shown on this purchase order. Upon review of the invoice, RRP will then forward to BG International Limited for payment directly to the vendor.

Cost Code:	End Use:		Sub Total This Page	$607,950.00
9515.6150	BG International Limited		GST	$30,397.50
			GRAND TOTAL	$638,347.50
INITIATOR Chandra Sarkar (403) 920-0095	RRP Approval Varun Tandon Procurement Specialist	Chandra Sarkar Sr. Project Manager	CLIENT APPROVAL Lowell A. Berg BG International Limited	